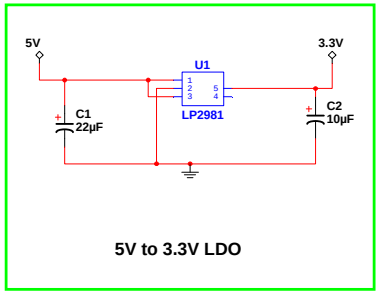

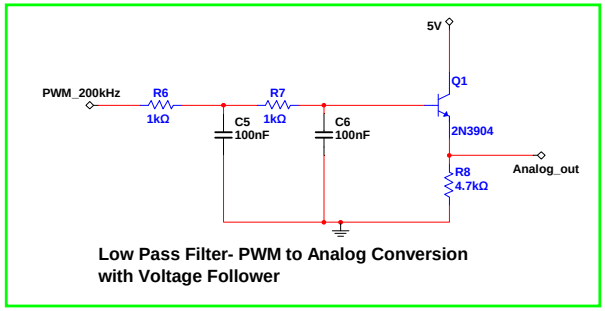

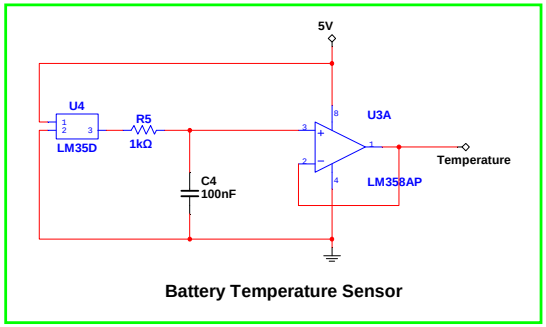

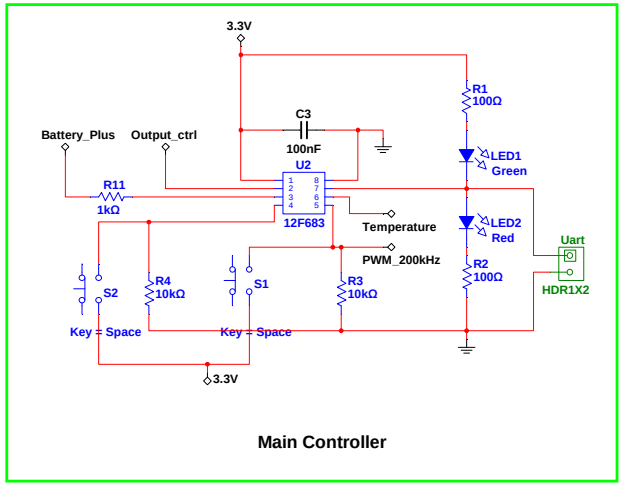

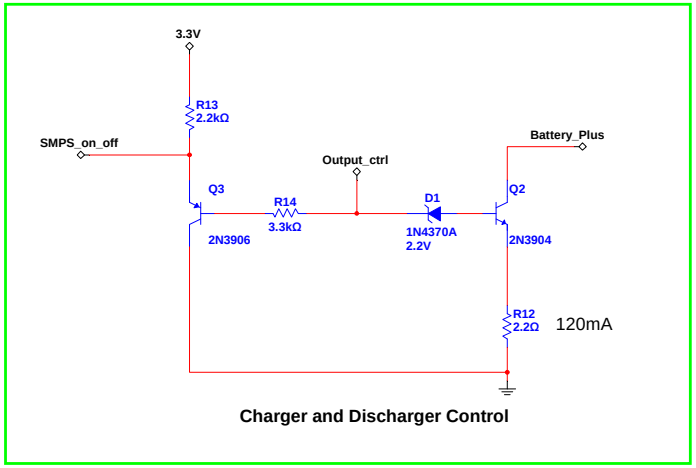

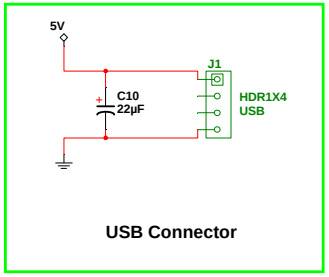

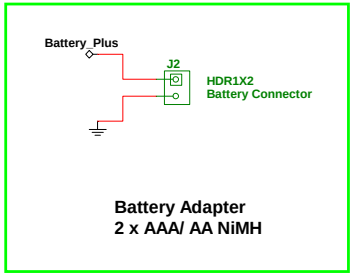

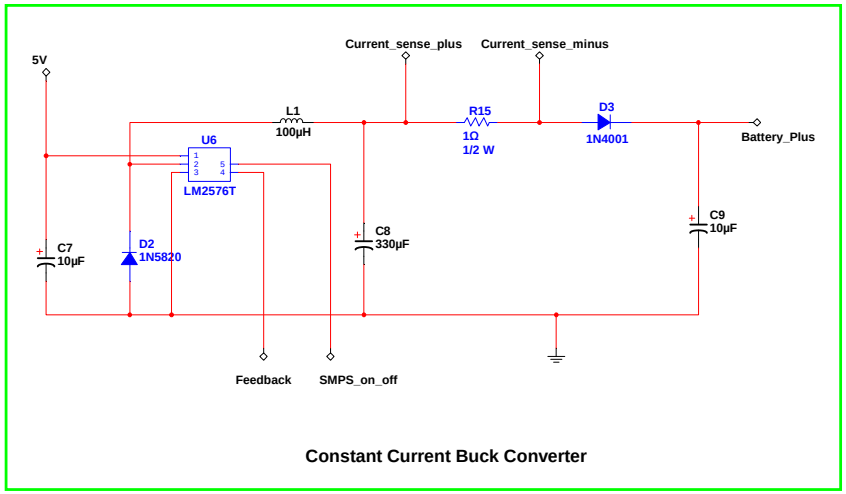

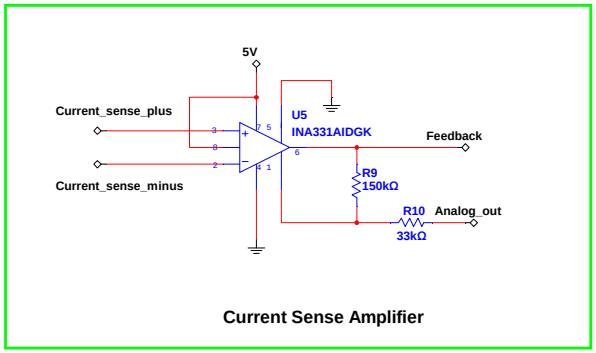

Smart USB Charger
Aruna Prabath Rubasinghe
2012-01-21